CAST

JAZHD SERIES

* Maximum Lift 150mm

Manual Handling

Max Speed 4kph

Zinc Plated Fabricated Steel Construction - Double Ball Race Swivel

Plate Fixing

200mm - 300mm

1600kg - 2800kg

-20°C to +80°C

-20°C to +80°C

200mm Diameter

Castor Height (mm)	Fixing Bolt (mm)	Bearing Option	Type	92 Shore A Brown Polyurethane on Cast Iron Product Code	Radius (mm	Tread (mm)	Load (kg)	92 Shore A Brown Polyurethane on Cast Iron Product Code	Radius (mm	Tread (mm) X 2	Load (kg)
264	16	Ball Bearing	Swivel	JAZHD200PTBJ	165	75	1600	JAZHD2X200PTBJWT	196	60	2600

250mm Diameter

Castor Height (mm)	Fixing Bolt (mm)	Bearing Option	Type	Product Code	Radius (mm	Tread (mm)	Load (kg)	Product Code	Radius (mm	Tread (mm) X 2	Load (kg)
314	16	Ball Bearing	Swivel	JAZHD250PTBJ	203	75	1800	JAZHD2XL250PTBJ	220	60	2800

300mm Diameter

Castor Height (mm)	Fixing Bolt (mm)	Bearing Option	Type	Product Code	Radius (mm	Tread (mm)	Load (kg)	Product Code	Radius (mm	Tread (mm) X 2	Load (kg)
375	16	Ball Bearing	Swivel	JAZHD300PTBJ	224	75	2200	-	-	-	-

Jacking unit Only
Product Code: JAZXXH

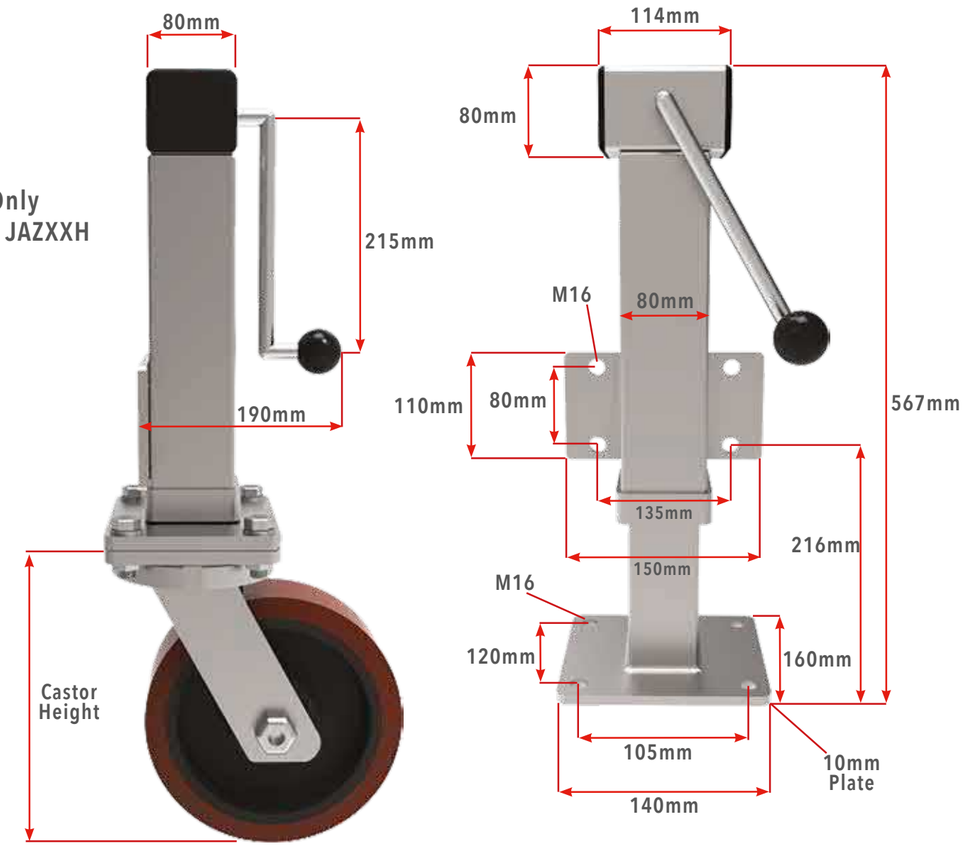

Quality, Innovation, Service and Flexibility

Load Rating

Jacking Castors are rated on a different principle to other castors. They are designed to lift the load off the floor and therefore each castor is liable to carry half the total load if they are not raised and lowered at the same time. To avoid any potential overloading we advise that each jacking castors load capacity should take at least 50% of the overall load capacity

$$\frac{\text{Unladen weight} + \text{Maximum Load}}{2}$$